Cambridge Assessment International Education

Cambridge International AS & A Level

CANDIDATE NAME

CENTRE NUMBER

CANDIDATE NUMBER

9779822461

PHYSICS **9702/31**

Paper 3 Advanced Practical Skills 1 **May/June 2020**

2 hours

You must answer on the question paper.

You will need: The materials and apparatus listed in the confidential instructions

INSTRUCTIONS

- Answer **all** questions.
- Use a black or dark blue pen. You may use an HB pencil for any diagrams or graphs.
- Write your name, centre number and candidate number in the boxes at the top of the page.
- Write your answer to each question in the space provided.
- Do **not** use an erasable pen or correction fluid.
- Do **not** write on any bar codes.
- You will be allowed to work with the apparatus for a maximum of 1 hour for each question.
- You should record all your observations in the spaces provided in the question paper as soon as these observations are made.
- You may use a calculator.
- You should show all your working and use appropriate units.

INFORMATION

- The total mark for this paper is 40.
- The number of marks for each question or part question is shown in brackets [ ].

For Examiner's Use	
1	
2	
Total	

This document has **12** pages. Blank pages are indicated.

© UCLES 2020

BLANK PAGE

You may not need to use all of the materials provided.

1 In this experiment, you will investigate an electrical circuit.

(a) ● Place the 18 Ω resistor in component holder R.

● Set up the circuit shown in Fig. 1.1.

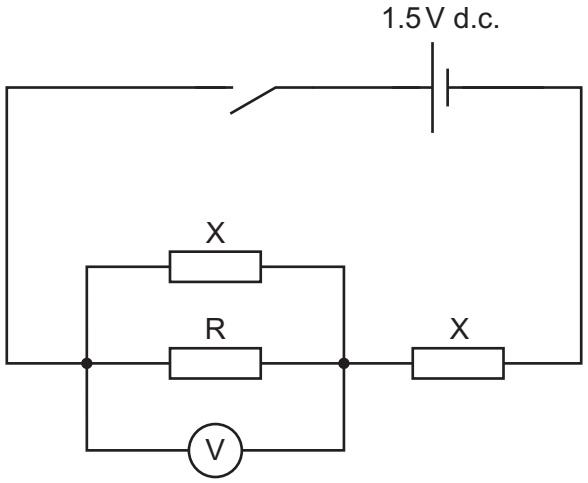

Fig. 1.1

● The resistor in R has resistance *R*. Record *R*.

R = ... Ω

● Close the switch.

● Record the voltmeter reading *V*.

V = ...

● Open the switch.

[1]

(b) Change the resistor in R and repeat **(a)** until you have six sets of readings of R and V. Include your values from **(a)**.

Record your results in a table. Include values of $\frac{1}{R}$ and $\frac{1}{V}$ in your table.

[9]

(c) **(i)** Plot a graph of $\frac{1}{V}$ on the y-axis against $\frac{1}{R}$ on the x-axis. [3]

(ii) Draw the straight line of best fit. [1]

(iii) Determine the gradient and y-intercept of this line.

gradient = ...

y-intercept = ...

[2]

© UCLES 2020

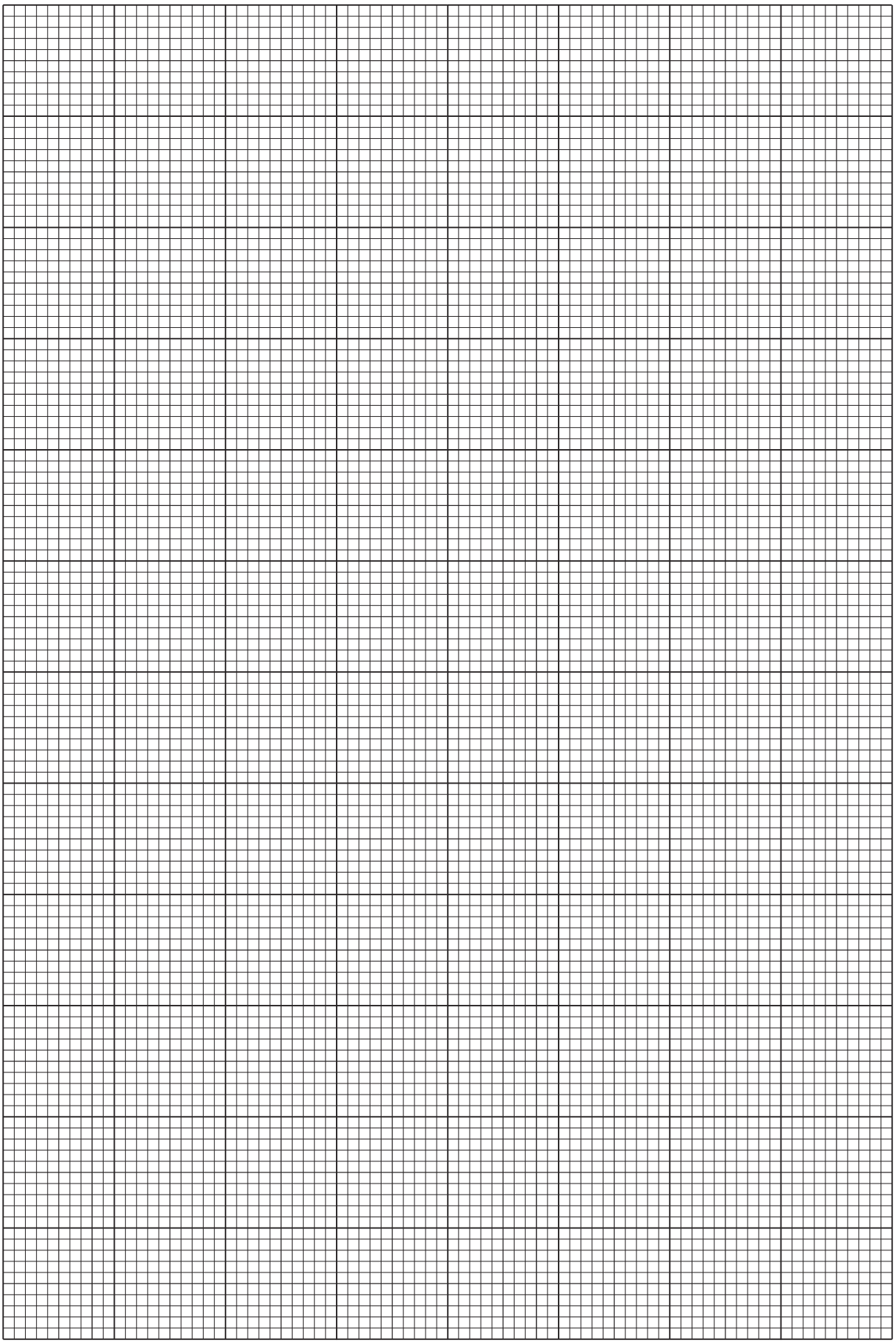

(d) It is suggested that the quantities V and R are related by the equation

$$\frac{1}{V} = \frac{A}{R} + B$$

where A and B are constants.

Using your answers in **(c)(iii)**, determine values for A and B.
Give appropriate units.

A = ...

B = ...
[2]

(e) (i) Theory suggests that

$$B = \frac{2}{E}$$

where E is the electromotive force (e.m.f.) of the cell.

Determine E.

E = ... V [1]

(ii) The two other resistors in the circuit each have resistance X.

When $R = X$, theory suggests that

$$\frac{1}{V} = \frac{3}{E}.$$

Determine X.

X = ... Ω [1]

[Total: 20]

© UCLES 2020

You may not need to use all of the materials provided.

2 In this experiment, you will investigate the equilibrium of a metre rule.

(a) (i) You have been provided with a metre rule with two springs attached.

The distance between one end of the metre rule and the string is L, as shown in Fig. 2.1.

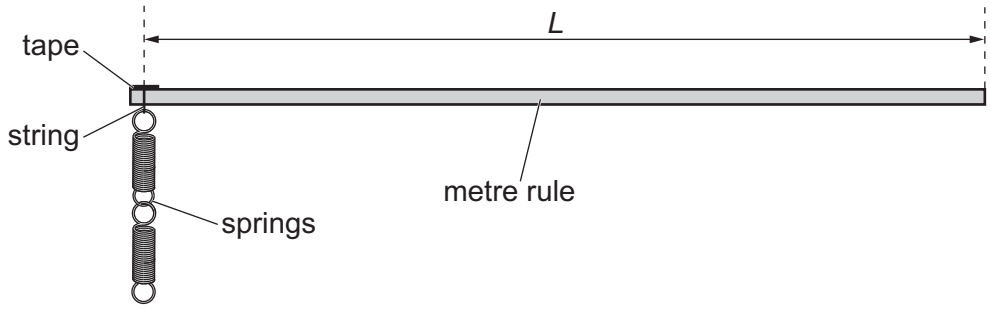

Fig. 2.1

Measure and record L.

L = ... [1]

(ii) Calculate $\frac{L}{n}$ where $n = 3$.

$\frac{L}{n}$ = ... [1]

(b) (i) ● Set up the apparatus as shown in Fig. 2.2.

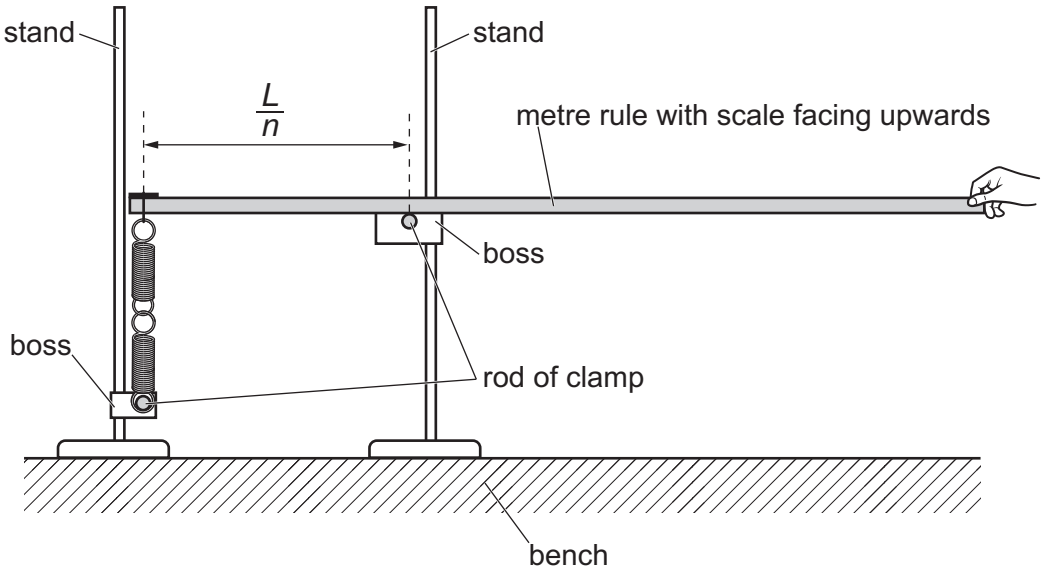

Fig. 2.2

- Adjust the apparatus until the horizontal distance between the centres of the rods of the clamps is equal to your value of $\frac{L}{n}$.
- Adjust the heights of the bosses so that the rule is horizontal and the springs are vertical and **unstretched** when the rule is held in position.
- Gradually release the rule by lowering your hand. The rule will tilt.
- The angle between the rule and the horizontal is θ, as shown in Fig. 2.3.

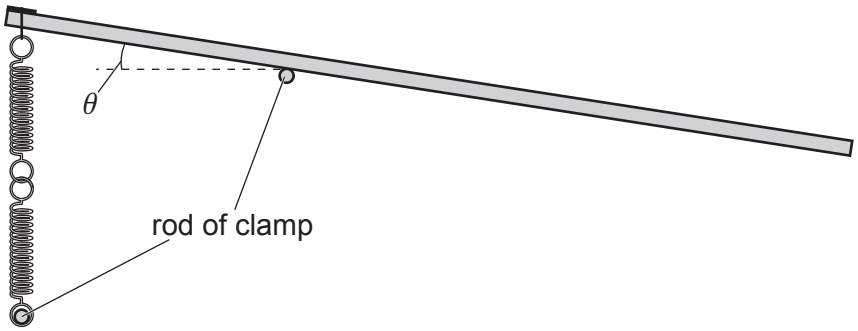

Fig. 2.3

Measure and record θ.

θ = ...° [2]

© UCLES 2020

(ii) Estimate the percentage uncertainty in your value of θ. Show your working.

percentage uncertainty = ... [1]

(iii) Calculate sin θ.

sin θ = ... [1]

(iv) Justify the number of significant figures that you have given for your value of sin θ.

.....

.....

..... [1]

(c) • Calculate $\frac{L}{n}$ where $n = 4$.

$\frac{L}{n}$ = ...

• Repeat **(b)(i)** and **(b)(iii)** using this value of $\frac{L}{n}$.

θ = ... °

sin θ = ...
[2]

(d) It is suggested that the relationship between θ and n is

$$\sin\theta = C\left(\frac{n^2}{2} - n\right)$$

where C is a constant.

(i) Using your data, calculate two values of C.

first value of C = ...

second value of C = ...
[1]

(ii) Explain whether your results support the suggested relationship.

.....

.....

.....

..... [1]

(e) Theory suggests that

$$C = \frac{Mg}{kL}$$

where

- M is the mass of the metre rule given on the card
- k is the spring constant of the spring system
- $g = 9.81\,\text{m}\,\text{s}^{-2}$.

Use your second value of C to determine a value for k. Give appropriate units.

$k =$ ..... [1]

(f) (i) Describe four sources of uncertainty or limitations of the procedure for this experiment.

1. .....

.....

2. .....

.....

3. .....

.....

4. .....

.....

[4]

(ii) Describe four improvements that could be made to this experiment. You may suggest the use of other apparatus or different procedures.

1. .....

.....

2. .....

.....

3. .....

.....

4. .....

.....

[4]

[Total: 20]

Permission to reproduce items where third-party owned material protected by copyright is included has been sought and cleared where possible. Every reasonable effort has been made by the publisher (UCLES) to trace copyright holders, but if any items requiring clearance have unwittingly been included, the publisher will be pleased to make amends at the earliest possible opportunity.

To avoid the issue of disclosure of answer-related information to candidates, all copyright acknowledgements are reproduced online in the Cambridge Assessment International Education Copyright Acknowledgements Booklet. This is produced for each series of examinations and is freely available to download at www.cambridgeinternational.org after the live examination series.

Cambridge Assessment International Education is part of the Cambridge Assessment Group. Cambridge Assessment is the brand name of the University of Cambridge Local Examinations Syndicate (UCLES), which itself is a department of the University of Cambridge.